Auf dem Schüffel 1
D-58513 Lüdenscheid
Tel.: +49-2351 - 5542-00
Fax +49 (2351) 554-861
info@assmann-wsw.com
www.assmann-wsw.com

PRODUCT CHANGE NOTIFICATION (PCN)

ISSUE DATE: 25/4/2022
MODIFICATION / REVISION DATE: 25/4/2022

A-MCUP-80100/Y
MODULAR CABLE

CHANGE NOTIFICATION: PCN 20220425_A-MCUP-80100/Y

DESCRIPTION OF CHANGES:
CHANGE OF DATA SHEET
CHANGE OF DATA SHEET
New Draw.-No. ASS_7407_CArev04

REASON FOR CHANGE:
CHANGE OF PRODUCT LOCATION
CHANGE OF PRODUCT LOCATION

KEY CHARACTERISTICS OF CHANGE: Details see page 3

PRODUCTS AFFECTED: A-MCUP-80100/Y

DATE OF CHANGE AND IMPLEMENTATION:
CHANGE: WEEK 18 / YEAR 2022
IMPLEMENTATION: 25/4/2022

RESPONSE: NO RESPONSE TO THIS NOTIFICATION IS REQUIRED

PCN REVISION HISTORY:
DATE OF REVISION: 25/4/2022 REVISION NUMBER: 00

Auf dem Schüffel 1
D-58513 Lüdenscheid
Tel.: +49-2351 - 554-200
Fax +49 (2351) 554-861
info@assmann-wsw.com
www.assmann-wsw.com

PRODUCT CHANGE NOTIFICATION (PCN)

ISSUE DATE: 25/4/2022
MODIFICATION / REVISION DATE: 25/4/2022

A-MCUP-80100/Y
DOCUMENT: DRAWING

ASSMANN WSW P/N	Drawing Number		ASSMANN WSW P/N	Drawing Number
A-MCUP-80100/Y	ASS_7407_CArev03	↔	A-MCUP-80100/Y	ASS_7407_CArev04

PCN REVISION HISTORY:
DATE OF REVISION: 25/4/2022 REVISION NUMBER: 00

Auf dem Schüffel 1
D-58513 Lüdenscheid
Tel.: +49-2351 - 554-200
Fax +49 (2351) 554-861
info@assmann-wsw.com
www.assmann-wsw.com

PRODUCT CHANGE NOTIFICATION (PCN)

ISSUE DATE: 25/4/2022
MODIFICATION / REVISION DATE: 25/4/2022

A-MCUP-80100/Y — OLD VERSION

Apprearance

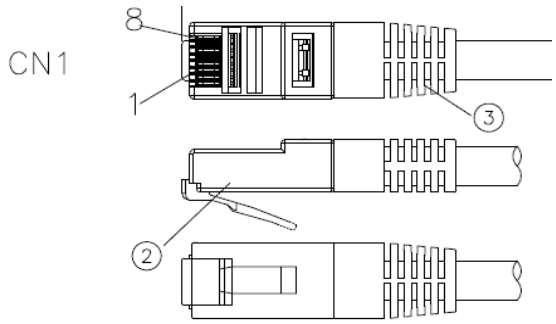

BOM

NO.	NAME.	Q'TY	SPECIFICATION
③	Molding PVC	2	Molding PVC 45P
②	RJ45 CONN	2	RJ45 8P8C,Two Fork gold plated contacts 3u" gold
①	CABLE	1	UTP(26AWG*x1PR)*4+PVC OD:4.9±0.2mm

A-MCUP-80100/Y — NEW VERSION

Apprearance

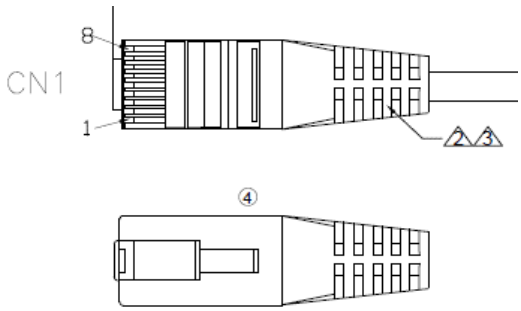

BOM

NO.	NAME.	Q'TY	SPECIFICATION
④	3 Molding PVC	2	Molding PVC 65P
④	2 RJ45 CONN	2	RJ45 8P8C, contacts 3u" gold-plated Un-shielded PC UL94V-2
④	1 CABLE	1	CAT 5E U/UTP(26AWGx1PR)*4+PVC Jacket OD:4.9±0.2mm

FOR DETAIL, PLEASE TAKE ATTACHED NEW DRAWING: FOR REFERENCE

PCN REVISION HISTORY:
DATE OF REVISION: 25/4/2022 REVISION NUMBER: 00

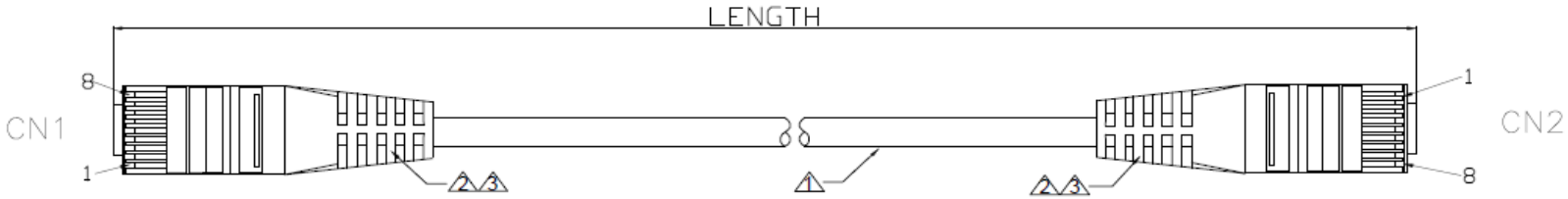

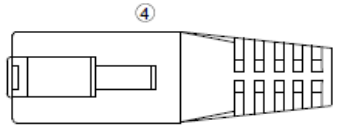

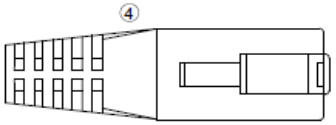

Order code: A-MCUP-80xxx Order color: Grey

Order code: A-MCUP-80xxx/x

Order color:
R: Red
Y: Yellow
G: Green
B: Blue
② BK:Black

Length Code	Length (M)
005	0.5
010	1
020	2
030	3
050	5
070	7
100	10
150	15
200	20
300	30

③ Tolerance

Length (M)	Max-M	Min-M
0.5	+0.03	-0.025
1	+0.04	-0.035
L≥2	+L x 3%	-L x 3%

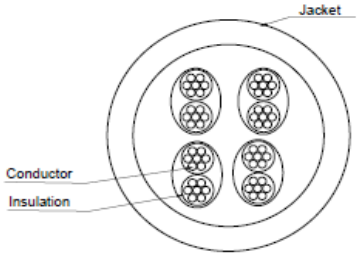

PIN OUT

CN1	WIRE COLOR	CN2
1	ORANGE/WHITE	1
2	ORANGE	2
3	GREEN/WHITE	3
6	GREEN	6
4	BLUE	4
5	BLUE/WHITE	5
7	BROWN/WHITE	7
8	BROWN	8

Electrical
Open/short/intermittence:100%
The operating temperature: -20°C~+60°C
The storage temperature: -20°C~+60°C

NO.	NAME.	Q'TY	SPECIFICATION
④ ③	Molding PVC	2	Molding PVC 65P
④ ②	RJ45 CONN	2	RJ45 8P8C, contacts 3u" gold-plated Un-shielded PC UL94V-2
④ ①	CABLE	1	CAT 5E U/UTP(26AWGx1PR)*4+PVC Jacket OD:4.9±0.2mm

RoHS compliant
Unit: mm

Scale	FREE
TOLERANCE	
DIM	TOL
Angle	TOL

Id.	Modification	Date	Name		Date	Name
④	Change the plant	12.04.2022	Luca	Drawn	25.05.2014	Joanna
③	Clarify the tolerance	23.08.2018	Segal	Approved	12.04.2022	Luca
②	Add the new P/N for black outer jacket	01.11.2017	Winnie			
①	Add the product type of length and color	04.08.2017	Fred			
⓪	Drawn	25.05.2014	Joanna			

ASSMANN WSW components

Customer-No.

ASSMANN WSW-No.
A-MCUP-80xxx/x

Drawing-No.
ASS 7407 CA

rev04

Replace

Sheet

CAB0742